File No.RDSO-TI0LKO(PSI)/1/2022-O/o PED/TI/RDSO

सत्यमेव जयते

Government of India,
Ministry of Railways
Research Designs & Standards Organisation,
Manak Nagar, Lucknow– 226 011

Telephone: 2465763 (O).
42805(Off.)
Fax : 91-0522-2465763
E-mail:dti.psi.rdso@gmail.com

Date:25.02.2022.

To,

1. The Principal Chief Electrical Engineer,

(i) Central Railway, Station Building, Mumbai CST – 400 001.
(ii) Eastern Railway, Fairlie Place, Kolkata-700 001.
(iii) East Central Railway, Hajipur-844 101.
(iv) East Coast Railway, Bhubaneshwar-751 023.
(v) Northern Railway, Baroda House, New Delhi - 110 001.
(vi) North Central Railway, Allahabad-211 015.
(vii) North Eastern Railway, Gorakhpur-273 012.
(viii) North Frontier Railway, Mailgaon - 781 011.
(ix) North Western Railway, Jaipur – 302 017.
(x) Southern Railway, Park Town, Chennai- 600 003.
(xi) South Central Railway, Railnilayam, Secunderabad-500 371.
(xii) South Eastern Railway, Garden Reach, Kolkata-700 043.
(xiii) South East Central, Railway, Bilaspur-495 004.
(xiv) South West Railway, DRM's Office, Hubli-580 028.
(xv) Western Railway, Churchgate, Mumbai-400 020.
(xvi) West Central Railway, Jabalpur- 482 001.
(xvii) Konkan Railway, Belapur Bhavan, Sector-11, CBD Belapur, Navi Mumbai 400614.

2. Chief Administrative Officer, CORE Allahanbad-211001

Sub: PSI guideline for increasing speed potential to 160kmph on NDLS-HWH & NDLS-BCT routes.

Ref: (i) Railway Board letter no. 2001/Elect(G)/170/1/Pt-II dated 08.09.2020.
(ii) This office letter no. TI/PSI/TSS/POLICY/19 dated 24.11.2020.

Technical Instruction No. TI/IN/0043 Rev.0 for "PSI guideline for increasing speed potential to 160kmph on NDLS-HWH & NDLS-BCT routes" was issued by this office vide letter under reference (ii) above. This instruction has been revised by this office and revised instruction no. TI/IN/0043 Rev.01 is enclosed herewith for information please.

This is issued with approval of the PED/TI.

25/02/22

(Gyan Prakash Katiyar)
Director TI-3
For Director General (TI)

Encl: As stated above.

सत्यमेव जयते

भारत सरकार, रेल मंत्रालय
GOVERNMENT OF INDIA
MINISTRY OF RAILWAYS

PSI GUIDELINE FOR

INCREASING SPEED POTENTIAL TO 160KMPH

ON

INDIAN RAILWAYS

INSTRUCTION No. TI/IN/0043 Rev.01

(This supersedes the Instruction No. TI/IN/0043 Rev.00)

Issued by:

Traction Installation Directorate

RESEARCH DESIGNS & STANDARDS ORGANISATION,

MANAK NAGAR,

LUCKNOW – 226 011

(For official use only)

February, 2022

Subject: PSI Guidelines for Increasing Speed Potential to 160kmph on Indian Railways

Technical Instruction No: TI/IN/0043 Rev.01

	Prepared By				
Signature	Ramesh Kr Pal Digitally signed by Ramesh Kr Pal Date: 2022.02.25 10:41:32 +05'30'	RATAN KUMAR SINGH Digitally signed by RATAN KUMAR SINGH Date: 2022.02.25 10:37:45 +05'30'	Praveen Chandra Yadav Digitally signed by Praveen Chandra Yadav Date: 2022.02.25 10:39:55 +05'30'	PRAMOD SAHU Digitally signed by PRAMOD SAHU Date: 2022.02.25 10:36:32 +05'30'	Gautam Kumar Digitally signed by Gautam Kumar Date: 2022.02.25 10:46:21 +05'30'
Date					
Designation	SSE/PQ	SSE/PR	SSE/TR	SSE/SCADA	JE(D)/TI

	Checked By	Reviewed By	Approved By
Signature	GYAN PRAKASH KATIYAR Digitally signed by GYAN PRAKASH KATIYAR Date: 2022.02.25 10:57:43 +05'30'	BHARDWAJ CHAUDHARY Digitally signed by BHARDWAJ CHAUDHARY Date: 2022.02.25 11:18:13 +05'30'	SUNIL KUMAR Digitally signed by SUNIL KUMAR Date: 2022.02.25 15:49:48 +05'30'
Date			
Designation	Director/TI-3	ED/TI	PED/TI

1.0 Up gradation of existing routes of Indian Railways for 160kmph

1.1 This Guideline shall supersede the Guideline no. TI/IN/0043 Rev.00 Issued on 24.11.2020.

1.2 Railway Board vide letter No. 2001/Elect(G)/170/1 dated 11.11.2019 instructed RDSO to issue the suitable guidelines for the up gradation of existing NDLS-HWH and DLI-KOTA-MUMBAI ROUTES for 160kmph in phased manner. Accordingly, RDSO vide letter no. TI/PSI/TSS/Policy/2019 dated 18.11.2019 and 24.12.2019 proposed certain guideline to Railway Board for approval. Draft PSI Guidelines were circulated to Zonal Railways (via CEDE's & 160kmph DLI-HWH, DLI-MUM Whatsapp Group) on 17.10.2020 for comments. The received observations from Railways were addressed and initial guideline was issued on 24.11.2020.

1.3 At the time of issue of initial guideline, number of specifications and drawings were under preparation and now these have been finalized and issued. In addition to this, the layouts of the TSS, SP and SSP have also been revised based on the various technical deliberations within the RDSO and suggestions received form Zonal Railways. Accordingly, the guideline is being revised and issued for implementation.

2.0 Proposal of Power Supply Installation for the 160kmph on the said routes:

In continuation to the different proposal as discussed in letters mentioned in Para 1.2 above, the proposal of 2X25 kV system is recommended as it is preferred solution across the globe to cater the higher power requirement on high density routes. Therefore, 2X25kV System may be used for these sections. The Traction Sub Station (TSS), Sectioning and paralleling Post (SP) and sub-Sectioning and Paralleling Post (SSP) are to be commissioned for 2X25kV System at location identified by Zonal Railways. A boundary SP i.e. interface post of 1x25 & 2x25 kV system may be considered.

3.0 2X25kV system

3.1 BRIEF DESCRIPTION OF THE 2 X 25 KV SYSTEMS.

In 2x25 kV system, power is fed from the TSS at 50 kV and utilization is achieved at 25 kV by providing Auto-transformers of adequate capacity and by providing one additional conductor normally referred as feeder wire (similar to the return conductor in BT/RC system). Centre point of the Auto Transformer is connected to the earth/Rail. This arrangement facilitates +25 kV Voltage between OHE and rail and -25 kV voltage between earth/Rail and the Feeder Wire.

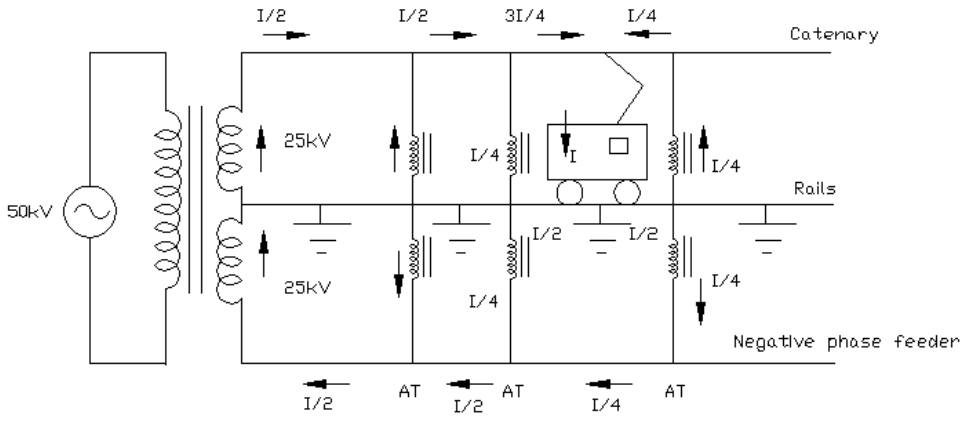

Figure:1

3.2 Advantage of 2X25kV system:-

(a) The 2X25 kV AT feeding system is suitable to meet larger power supply needs with the inherent advantage of less voltage drop in feeder circuit for a given spacing of traction substations. To meet the larger power supply requirements, 2X25kV system is used in various countries including DFCCIL in India.

(b) Power is generally obtained from 220 kV or 132 kV three phase networks from the power utility to reduce voltage unbalance on the transmission network. In the 2X25kV TSS, the three phase supply is utilized at the Traction Sub-station.

(c) The 2X25 kV Auto Transformer (AT) system is having feeding voltage of 50 kV from the substation which is dropped to 25 kV by the AT installed at about 10 to 18 Km spacing along the track for supply to overhead equipment and rolling stocks. A pilot project for this system was provided in Bina-Katni Section. The design of the system was done with the help of Japanese Consultants.

(d) Better voltage regulation even at higher load currents.

(e) Minimized rail currents resulting in reduction in rail potential rise. Return current through ground also reduces considerably.

(f) In 2X25kV system, the return current flows through the feeder wire. Since the direction of current in the feeder wire is opposite to the direction of current in the catenary wire, it minimizes the effect of the electromagnetic Interference in the proximity of the traction line.

(g) Preferred solution across the globe to meet higher power requirement for Traction Purpose.

4.0 Schemes proposed for 2X25kV System along with various Transformers.

4.1 Scott Connected Transformer Scheme:

(a) In this scheme two Scott connected Transformers & four Auto-transformers are to be installed at a TSS along with associated switchgear for Control & protection. The two windings of a Scott transformer i.e. Main and Teaser windings are of equal power rating and feed either side of the TSS independently. The supply of both the windings is at a phase difference of 90 degree and separated by neutral section provided near TSS. Out of two Scott transformers, only one is in operation and the other is on standby.

(b) **Scott Connected Transformer**:

Scott- connected transformer of 60/84/100 MVA (ONAN/ONAF/OFAF) is used to feed power to the traction system. It has a voltage input of 220kV or 132kV, 3 phase, 50 Hz and two independent secondary winding for output at 50 kV. The Transformer has two secondary windings, known as the main winding and teaser winding. The two windings are identical in voltage and current rating but are in phase difference of 90 degree. These two windings of equal power rating i.e. Main & Teaser windings, feed power on either side of the TSS. The feed of different phase is separated by neutral section provided near TSS. The Scott Connected Transformer in ONAN Mode shall feed the 30MVA Power to each side of the TSS.

(c) **Auto Transformers:**

Auto- transformers are used at TSS, SP and SSP. The transformer winding of 50kV with Centre tapped neutral with both the terminals of the Autotransformer winding connected to feeder and contact /Catenary wire. The neutral terminal of the ATs is connected to rail.

Two adjacent ATs feeding on the network share train loads on the section between them and transfer the load current on 25 kV circuit to 50 kV circuit, consisting of contact wire and AT feeder. This reduces the voltage drop on feeding network remarkably. Furthermore, it minimizes the return current on the rail, which results in reducing induced voltage on nearby telecommunication lines.

In the Scott connected arrangement for 2 Line section, 12.3 MVA Auto transformers are to be installed at the TSS and 8MVA Auto transformers to be used at the SP & SSP, as adopted by DFCCIL in Western Corridor. Further, the Scott connected arrangement for 3 Line and 4 line sections have been provided with 12.3 MVA auto transformers at TSS and 16.5 MVA auto transformers at SP/SSP. Moreover, no independent AT post has been proposed in any scheme.

4.2 V Connected Transformer Scheme:

(a) In this scheme, three single phase transformers are connected to different pairs of three phase of incoming supply forming an open delta connection on the primary side. Out of the three single

phase transformers, first transformer feeds the OHE on one side of the TSS, second transformer (mid one) remains as standby and third transformer feeds the OHE on the other side of the TSS. The power supply on either side of TSS is at a phase difference of 120 degree and therefore separated by a neutral section provided near TSS.

(b) **V- Connected Transformer**:

In the above arrangement, three 38/53/63 MVA (ONAN/ONAF/OFAF) Transformers are provided at TSS along with associated switchgear for Control and Protection. Each single phase transformer has a voltage input of 220kV or 132kV, 50 Hz and two independent secondary windings, to be connected externally in such a manner (two inner terminals of these secondary windings are connected with each other and also connected to earth/Rail) so as to give an output voltage of 2X25kV. The outer terminals of the windings are connected to Feeder wire and overhead contact/catenary wire respectively. Two transformers shall be in operation at a time and one shall be on standby. In the V connected Scheme, each transformer in ONAN mode shall feed the 38MVA Power in either side of the TSS.

(c) **Auto Transformers:**

i. Auto- transformers are used at SP and SSP. The transformer winding is 50 kV with Centre tapped neutral with both the terminals of the winding connected to AT feeder and the contact wire. The neutral terminals of the ATs are connected to rail.
ii. Two adjacent ATs feeding on the network share train loads on the section between them and transfer the load current on 25 kV circuit to 50 kV circuit, consisting of contact & catenary wire and AT feeder. This reduces the voltage drop on the feeding network remarkably. Furthermore, it minimizes the return current on the rail, which results in reducing the induced voltage on nearby telecommunication lines.
iii. Auto transformers are not used at the TSS. However, these have been provided at SP/SSP of 16.5 MVA capacities. Moreover, no independent AT post has been proposed.

4.3 Scott connected vs V Connected Scheme

i. Considering the three phase utilization equally in the Scott Connected scheme, it is better in reducing the unbalancing at point of common coupling with the utility as compared to V-Connected scheme. The point of common coupling is already defined in the clause no. 2.2 of RDSO Instruction no. TI/IN/0019 (09/09).
ii. The Voltage Unbalance in Scott Connected Transformer Scheme is least and therefore the Railways should preferably provide Scott Connected Transformer wherever the voltage unbalance problem is seen. The detailed study regarding this is available in clause no. 2.1.13 of Chapter 1, Part-II in Volume-1 of Treatise on Electric Traction Distribution, which can be readily referred (page no. 125 of Volume-1).The problem of unbalancing has been raised by few power utilities and therefore Scott or V connected arrangement should be chosen judiciously after coordinating with the power utilities.
iii. Scott Connected Transformer is more complex and costlier than the V connected Transformer but Scott connected Transformer effectively checks the voltage unbalance.
iv. Initially, in Bina-Katni Section of IR, the Scott Connected Transformers were imported; however, Transformers for V connected scheme were supplied by an Indian Manufacturer.
v. The maintenance/Overhauling of the Scott Connected Transformer is more complex in comparison to Single Phase Transformer. V connected scheme is economical in comparison to Scott Connected scheme.
vi. Since, no AT is to be used at the TSS of V connected scheme; it is simpler than Scott Connected scheme.

4.4 Utilisation of Scheme:

Considering the complexities involved of the unbalancing (as deliberated under Para 4.3 above), space constraints and other site problems, the Scott connected or V connected arrangement may be chosen by the Zonal Railways after coordinating with the power utilities and with the approval of PCEEs.

5.0 Spacing of the TSS & Switching post (SP/SSP):

5.1 Two-line section – Considering the load requirement of 0.5MVA/TKM in ONAN mode on the main line section, the spacing of TSS in Scott connected scheme of 60-70 Km is suggested. In the proposed V connected scheme, the transmission of full power from the transformer is not at 50 kV and therefore the spacing of the TSS in V connected scheme for 2 Line system has been kept same as in Scott connected scheme i.e. 60-70 KM with power requirement of around 0.6MVA/TKM in ONAN mode.

5.2 Three line sections – In the 3 Line section, the loading in MVA/TKM basis will be less than the 2 line system as all the three lines will not be fully loaded at a time. Therefore, the load requirement of around 0.4 MVA/TKM in ONAN Mode for 3 Line section has been considered and accordingly the spacing of TSS in Scott connected scheme is suggested as 50-60 KM. In the proposed V connected scheme for 3 line, the transmission of full power from the transformer is not at 50 kV and therefore the spacing of the TSS in V connected scheme for 3 Line system has been kept same as in Scott connected scheme i.e. 50-60 KM with power requirement of around 0.5 MVA/TKM in ONAN mode.

5.3 Four line section– In the 4 Line section, the loading in MVA/TKM basis will be less than the 3 line system as all the four lines will not be fully loaded at a time. Therefore, the load requirement of less than 0.4 MVA/TKM in ONAN Mode for 4 Line section has been considered and accordingly the spacing of TSS in Scott connected scheme is suggested as 40-50 KM. In the proposed V connected scheme for 4 line, the transmission of full power from the transformer is not at 50 kV and therefore the spacing of the TSS in V connected scheme for 4 Line system has been kept same as in Scott connected scheme i.e. 40-50 KM with a power requirement of around 0.5 MVA/TKM in ONAN mode.

5.4 The sectioning and paralleling post (SP) is to be constructed at approx. midway between consecutive TSS and SSP may be constructed at approx. midway between TSS & SP.

5.5 The transformer is provided with ONAF/OFAF mode to meet the power requirement under feed extension condition and to account for the margin of 10 KM given in the spacing.

5.6 Wherever the Traction Sub Station feeds a mix of 2 line- 3 line sections, 3 line-4 line sections etc., the spacing and location selection of the Traction Sub Station may be decided by considering the above power requirement in ONAN mode on TKM basis as per the scheme adopted. In such cases, the power requirement on each side of Traction Sub Station may be done separately and accordingly the TSS and SP to be located in terms of spacing. The SSP may be provided at approximately mid of TSS and SP.

6.0 Operational Philosophy

6.1 The spacing of the Traction Sub Station has been proposed in the above Para considering the ONAN ratings of the Traction Power transformers and considering the load requirement of normal operation.

6.2 In the case of feed extension from a particular Traction Sub Station due to failure of the adjacent Traction Sub Station, the Transformer of the healthy TSSs may be utilized on the ONAF/OFAF mode and it will be possible to take the full load of the failed Traction Sub Station.

6.3 In Scott connected scheme, there are two double pole feeder circuit breakers for either side of the Traction Sub Station. One Circuit Breaker feeds the OHE with/without interrupters and another is kept redundant for each side of the Traction Sub Station.

6.4 In V connected scheme, the secondary voltages of the traction transformers are out of phase by 120° from each other and therefore it is required to understand the operation. The standby transformer provided in the middle can feed in either direction through the motorized coupling isolator provided on the bus, in case of failure of any of the outer transformer. Also, there are two double pole feeder circuit breakers for either side of the Traction Sub Station. One Circuit Breaker feeds the OHE with/without interrupters and another is kept redundant for each side of the Traction Sub Station.

6.5 SP and SSP for 2 Line systems have been proposed separately for Scott connected arrangement and V connected arrangement. The SP/SSP for 2 Line V connected arrangement is of common Bus type. The SP/SSP for 3 lines and 4 Lines section have been proposed of common bus type and may be used with both kind of feeding arrangement i.e. Scott connected or V connected arrangement.

6.6 In Common Bus type of SP & SSP, the fault on common Bus may hamper the train operation. Therefore, the Bypass Motorised Isolator (for off-load sectioning or off-load feed extension) has been provided to continue the train operation even in fault at common Bus. Further, the common Bus type SP/SSP may be used as a boundary post for interfacing 2Line/3Line/4Line sections of 2X25 kV sections with each other.

6.7 Interlocking

a. Scott Connected TSS

- The Closing of the LVCB on the secondary side of Traction Transformer (i.e. 50kV, SF_6CB) shall be possible only when any one of the Circuit Breaker of associated Autotransformer at TSS is in closed condition.
- The automatic opening of the LVCB on the secondary side of Traction Transformer (i.e. 50kV, SF_6CB) shall happen as soon as all the Circuit Breakers of the associated Autotransformers at the Traction Sub Station are opened.
- The closing of coupling motorised isolator between Main Bus and Teaser Bus should be possible only when all the LVCBs of the Transformer are open. This coupling isolator has been provided for the feed extension in case of failure of TSS.
- To ensure above, necessary interlock shall be provided.

b. V Connected TSS

In this scheme the middle Traction transformer is to be used in either direction in case of failure of any one of the outer transformer. Therefore necessary interlock is to be provided between Motorised Coupling Isolator and LV Circuit Breaker in order to avoid wrong phase coupling as well as to ensure off load operation of the Motorised isolator.

6.8 There is off load circuit tap changer on primary side of the transformer with 6 tap positions (including principal tap) for voltage adjustment. Therefore, the tap changer should be operated only when both the primary and secondary circuit breakers are in open condition.

7.0 Three Phase connectivity to TSS:-

Railways to work out for new 3 phase, transmission line or extending/upgrading the existing transmission line on 3 phase to new location for connecting different TSS on these routes considering

the economics of building this transmission line. In case the new Line is constructed, the line should support the capacity of transformer and adequate redundancy. To meet the power requirement with adequate redundancy, the provision of double circuit Transmission line may be considered. As per the CEA notification, dated 20.08.2010 Chapter IV, Part-A, Para 41 (3), table 7, In case of 66kV Voltage Level, The transformation capacity of any single sub-station for meeting loads shall not normally exceed 75MVA. In view of this limitation, if 66kV incoming supply is there, only ONAN Mode Transformer i.e. 60MVA Scott Connected or 38X2= 76MVA, V connected can be used. To address the huge power requirement for future load, it is suggested to not to take feed from the utility at 66 kV. Therefore, it is suggested to use 220kV or 132kV incoming Voltage only.

8.0 Layout of the TSS, SP & SSP

8.1 Details of the layouts of the Traction Sub Station

8.1.1 Traction Sub Station Layouts with Scott Connected Transformers

SN	Description	Drawing No.	Required area *(Depth x Width)
1.	Typical layout of 132/2X25kV Traction Sub Station with Scott Connected Transformers (For Double Line section) with parallel to track.	TI/DRG/PSI/AT/RDSO/ 00009/20/1 Mod C	(46 X 120.5)
2.	Typical layout of 132/2X25kV Traction Sub Station with Scott Connected Transformers (For Double Line section) with perpendicular to track.	TI/DRG/PSI/AT/RDSO/ 00010/20/1 Mod C	(103X48.75)
3.	Typical layout of 132/2X25kV Traction Sub Station with Scott Connected Transformers (For Three Line section) with parallel to track.	TI/DRG/PSI/AT/RDSO/ 00030/20/1 Mod B	(50X122)
4.	Typical layout of 132/2X25kV Traction Sub Station with Scott Connected Transformers (For Three Line section) with perpendicular to track.	TI/DRG/PSI/AT/RDSO/ 00031/20/1 Mod B	(105.5X50)
5.	Typical layout of 132/2X25kV Traction Sub Station with Scott Connected Transformers (For Four Line section) with parallel to track.	TI/DRG/PSI/AT/RDSO/ 00032/20/1 Mod B	(50X130)
6.	Typical layout of 132/2X25kV Traction Sub Station with Scott Connected Transformers (For Four Line section) with perpendicular to track.	TI/DRG/PSI/AT/RDSO/ 00033/20/1 Mod B	(106.5X50)
7.	Typical layout of 220/2X25kV Traction Sub Station with Scott Connected Transformers (For Double Line section) with parallel to track	TI/DRG/PSI/AT/RDSO/ 00024/20/1Mod C	(46.25X131.5)
8.	Typical layout of 220/2X25kV Traction Sub Station with Scott Connected Transformers (For Double Line section) with perpendicular to track	TI/DRG/PSI/AT/RDSO/ 00025/20/1Mod C	(114X48.75)
9.	Typical layout of 220/2X25kV Traction Sub Station with Scott Connected Transformers (For Three Line section) with parallel to track.	TI/DRG/PSI/AT/RDSO/ 00038/20/1Mod B	(47.55 X 134.5)
10.	Typical layout of 220/2X25kV Traction Sub Station with Scott Connected Transformers (For Three Line section) with perpendicular to track	TI/DRG/PSI/AT/RDSO/ 00039/20/1 Mod B	(117.5 X 48.5)
11.	Typical layout of 220/2X25kV Traction Sub Station with Scott Connected Transformers (For Four Line section) with parallel to track.	TI/DRG/PSI/AT/RDSO/ 00040/20/1 Mod B	(47.579 X142)

12.	Typical layout of 220/2X25kV Traction Sub Station with Scott Connected Transformers (For Four Line section) with perpendicular to track	TI/DRG/PSI/AT/RDSO/ 00041/20/1 Mod B	(117.5X48.5)

*** (Depth:** Dimension perpendicular to track in meter, **width**: Dimension parallel to track in meter)

8.1.2 Traction Sub Station Layouts with V Connected Transformers

SN	Description	Drawing No.	Required area *(Depth x Width)
1.	Typical layout of 132/2X25kV Traction Sub Station with V-Connected Transformers (For Double Line section) with parallel to track.	TI/DRG/PSI/AT/RDSO/ 00034/20/1 Mod B	(50X106)
2.	Typical layout of 132/2X25kV Traction Sub Station with V-Connected Transformers (For Double Line section) with perpendicular to track.	TI/DRG/PSI/AT/RDSO/ 00035/20/1 Mod B	(94X50)
3.	Typical layout of 132/2X25kV Traction Sub Station with V-Connected Transformers (For Three Line section) with parallel to track.	TI/DRG/PSI/AT/RDSO/ 00011/20/1 Mod B	(50X114.75)
4.	Typical layout of 132/2X25kV Traction Sub Station with V-Connected Transformers (For Three Line section) with perpendicular to track.	TI/DRG/PSI/AT/RDSO/ 00012/20/1 Mod B	(94.5X50)
5.	Typical layout of 132/2X25kV Traction Sub Station with V-Connected Transformers (For Four Line section) with parallel to track.	TI/DRG/PSI/AT/RDSO/ 00013/20/1 Mod B	(50X129)
6.	Typical layout of 132/2X25kV Traction Sub Station with V-Connected Transformers (For Four Line section) with perpendicular to track.	TI/DRG/PSI/AT/RDSO/ 00014/20/1 Mod B	(94.5X52.5)
7.	Typical layout of 220/2X25kV Traction Sub Station with V-Connected Transformers (For Double Line section) with parallel to track.	TI/DRG/PSI/AT/RDSO/ 00042/20/1 Mod B	(54.5 x 122) OR (50X122)**
8.	Typical layout of 220/2X25kV Traction Sub Station with V-Connected Transformers (For Double Line section) with perpendicular to track.	TI/DRG/PSI/AT/RDSO/ 00043/20/1 Mod B	(110 x 54.5)
9.	Typical layout of 220/2X25kV Traction Sub Station with V-Connected Transformers (For Three Line section) with parallel to track.	TI/DRG/PSI/AT/RDSO/ 00026/20/1 Mod B	(54.5x130.75) OR (50X130.75)**
10.	Typical layout of 220/2X25kV Traction Sub Station with V-Connected Transformers (For Three Line section) with perpendicular to track.	TI/DRG/PSI/AT/RDSO/ 00027/20/1 Mod B	(110 x 54.5)
11.	Typical layout of 220/2X25kV Traction Sub Station with V-Connected Transformers (For Four Line section) with parallel to track.	TI/DRG/PSI/AT/RDSO/ 00028/20/1 Mod B	(54.5 x 145) OR (50X145)**
12.	Typical layout of 220/2X25kV Traction Sub Station with V-Connected Transformers (For Four Line section) with perpendicular to track.	TI/DRG/PSI/AT/RDSO/ 00029/20/1 Mod B	(110X55.5)

*** (Depth:** Dimension perpendicular to track in meter, **width**: Dimension parallel to track in meter)
**Road is not planned initially and Control room to be shifted at the space available towards 25kV Bay.

8.2 Details of the layouts of the SP & SSP

SN	Description	Drawing No.	Required area *(Depth x Width)
1.	General arrangement of Sub Sectioning and Paralleling Post (SSP) in 2X25kV 'AT' System (on double line section) for Scott Connected Transformer TSS	TI/DRG/PSI/AT/RDSO/ 00015/20/01 Mod A	(25X50) or (23.5X50)**
2.	General arrangement of Sectioning and Paralleling Post (SP) in 2X25kV 'AT' System (on double line section) for Scott Connected Transformer TSS	TI/DRG/PSI/AT/RDSO/ 00016/20/01 Mod A	(23.5X50)
3.	General arrangement of Sub Sectioning and Paralleling Post (SSP) in 2X25kV 'AT' System (on double line section) for V- Connected Transformer TSS	TI/DRG/PSI/AT/RDSO/ 00036/20/01 Mod A	(25X50) or (23.5X50)**
4.	General arrangement of Sectioning and Paralleling Post (SP) in 2X25kV 'AT' System (on double line section) for V- Connected Transformer TSS	TI/DRG/PSI/AT/RDSO/ 00037/20/01 Mod A	(25X50) or (23.5X50)**
5.	General arrangement of Sub Sectioning and Paralleling Post (SSP) in 2X25kV 'AT' System (on three line section).	TI/DRG/PSI/AT/RDSO/ 00017/20/01 Mod A	(25X50) or (23.5X50)**
6.	General arrangement of Sectioning and Paralleling Post (SP) in 2X25kV 'AT' System (on three line section).	TI/DRG/PSI/AT/RDSO/ 00018/20/01 Mod A	(25X50) or (23.5X50)**
7.	General arrangement of Sub Sectioning and Paralleling Post (SSP) in 2X25kV 'AT' System (on four line section).	TI/DRG/PSI/AT/RDSO/ 00019/20/01 Mod A	(25X50) or (23.5X50)**
8.	General arrangement of Sectioning and Paralleling Post (SP) in 2X25kV 'AT' System (on four line section).	TI/DRG/PSI/AT/RDSO/ 00020/20/01 Mod A	(25X50) or (23.5X50)**
9.	General arrangement of Boundary Sectioning and Paralleling Post (SP) in 2X25kV 'AT' System for Scott Connected Transformer TSS (on double line section)	TI/DRG/PSI/AT/RDSO/ 00021/20/01 Mod A	(23X50)
10.	General arrangement of Boundary Sectioning & paralleling post (SP) in 2 x 25 kV 'AT' system (on 3 line section)	TI/DRG/PSI/AT/RDSO/ 00022/20/01 Mod A	(25X50) or (23.5X50)**
11.	General arrangement of Boundary Sectioning & paralleling post (SP) in 2 x 25 kV 'AT' system (on 4 line section)	TI/DRG/PSI/AT/RDSO/ 00023/20/01 Mod A	(25X50) or (23.5X50)**
12.	General arrangement of Boundary Sectioning & Paralleling post (SP) in 2 x 25 kV "V-connected" 'AT' system (on Double line section)	TI/DRG/PSI/AT/RDSO/ 00050/21/01 Mod A	(25X50) or (23.5X50)**

***(Depth:** Dimension perpendicular to track in meter, **width**: Dimension parallel to track in meter)
**Reduced size where gantry is on boundary.

Note:

1. The layout of the TSS, SP & SSP detailed in above Para has been prepared by utilizing minimum possible area. Thus, if the required space is not available, use of the underground cables on the HV & LV side may be considered keeping in view the economy of design. The location of the control room, road in TSS etc. can be changed by the Zonal Railways based on their experience and availability of space. Wherever, the acute shortage of land is faced, the Road may not be provided

initially for access but at the same time the process of land acquisition may be started and the layout to be finalized accordingly.

2. The guideline for the provision of ABT based meter has already been issued by this office vide letter no. TI/PSI/TSS/POLICY/17 dated13.10.2017 (Annexure-1) and letter no. TI/PSI/TSS/POLICY/18/02 dated 26.07.2018 (Annexure-2).

8.3 Other Miscellaneous drawings

SN	Description	Drawing No.
1.	Typical schematic diagram of protection for 132/2x25kV Traction sub-station with Scott-connected transformers	TI/DRG/PSI/AT/RDSO/ 00051/21/0 Mod A
2.	Typical schematic diagram of protection for 220/2x25kV Traction sub-station with V-connected transformers	TI/DRG/PSI/AT/RDSO/ 00044/21/0
3.	General scheme of supply for 2x25 kV, 50 Hz Scott connected traction transformer traction system	TI/DRG/PSI/SLD/RDSO/ 00045/21/0
4.	General scheme of supply for 2x25 kV, 50 Hz V- connected traction transformer traction system	TI/DRG/PSI/SLD/RDSO/ 00046/21/0
5.	Typical layout of cable trench, foundation & cable schedule of 132/2x25 kV Traction Sub - Station with Scott connected transformers (for four line section) with parallel to track	TI/DRG/PSI/TRCSFD/RDSO/ 00047/21/0
6.	Typical layout of cable trench, foundation & cable schedule of 132/2x25 kV Traction Sub - Station with V connected transformers (for four line section) with perpendicular to track	TI/DRG/PSI/TRCSFD/RDSO/ 00048/21/0
7.	Typical layout of cable trench, foundation & cable schedule of Switching Station in 2X25kV 'AT' System (for four line section)	TI/DRG/PSI/AT/RDSO/ 00049/21/0
8.	Typical layout of cable trench, foundation & cable schedule of Sectioning and Paralleling Post (SP) in 2x25 kV AT System on Double line for Scott Connected Transformer TSS.	TI/DRG/PSI/AT/RDSO/ 00052/21/0
9.	Typical layout of Control room Building in 2X25kV Traction Sub-Station.	TI/DRG/PSI/CR2X25/RDSO/ 0210
10.	Typical layout of Control room Building in 2X25kV SP/SSP/AT Post.	TI/DRG/PSI/CR2X25/ SPSSPATP/0210
11.	Tee Connector to suit "BERSISMIS" 'AAAC' and "BERSISMIS" 'AAAC' in 2X25 kV system.	TI/DRG/PSI/CONECT/RDSO/ 00053/21/0
12.	Tee Connector to suit BULL 'AAC' conductor and BULL 'AAC' conductor in 2X25 kV system	TI/DRG/PSI/CONECT/RDSO/ 00054/21/0
13.	Rigid connector on S.I. to suit BERSISMIS (36mm Dia.) "AAAC" conductor in 2X25 kV system.	TI/DRG/PSI/CONECT/RDSO/ 00055/21/0
14.	Rigid connector on S.I. to suit BULL (38.25mm Dia.) "AAC" conductor in 2X25 kV system.	TI/DRG/PSI/CONECT/RDSO/ 00056/21/0
15.	Flexible connector to suit 50MM O/D Al. Tube Bus bar for Double Pole circuit breaker and LV side of Traction transformer in 2X25kV system.	TI/DRG/PSI/CONECT/RDSO/ 00057/21/0
16.	Rigid through connector to suit BERSIMIS (36mm Dia) "AAAC" Conductor and SPIDER "AAC" conductor for 25 kV PT type II. (T-Type)	TI/DRG/PSI/CONECT/RDSO/ 00058/21/0
17.	Rigid through connector to suit BULL (38.25mm Dia) "AAC" Conductor and SPIDER "AAC" conductor for 25 kV PT type II (T-	TI/DRG/PSI/CONECT/RDSO/ 00059/21/0

	Type)	
18.	Tee Connector to suit 50 O/D Al. Tube and "BERSISMIS" 'AAAC' conductor in 2X25 kV system.	TI/DRG/PSI/CONECT/RDSO/ 00060/21/0
19.	Tee Connector to suit 50 O/D Al. Tube and BULL 'AAC' conductor in 2X25 kV system.	TI/DRG/PSI/CONECT/RDSO/ 00061/21/0
20.	Typical Termination arrangement for strung bus "BERSISMIS" (AAAC) conductor in 2X25 kV system.	TI/DRG/PSI/CONECT/RDSO/ 00062/21/0
21.	Typical Termination arrangement for strung bus "BULL" (AAC) conductor in 2X25 kV system.	TI/DRG/PSI/CONECT/RDSO/ 00063/21/0
22.	Flexible connector to suit BULL (38.25mm Dia.) "AAC" Conductor for Double Pole circuit breaker and LV Side of traction transformer in 2X25kV System.	TI/DRG/PSI/CONECT/RDSO/ 00064/21/0
23.	Bimetallic terminal Connector to suit ZEBRA (28.58mm Dia.) ACSR conductor & AL/CU Pad of isolator/CT/CB or 50mm O/D Al tube and AL/CU Pad of isolator/CT/CB.	ETI/PSI/P/11030 Mod. D

9.0 Power Factor Improvement

9.1 Railway Board vide letter no. 2008/RE/170/1 dated 12.06.2012 (Annexure-3) has already communicated that "it has been decided that Railways/CORE/MRVC/RVNL etc. should provide only fixed type capacitor bank in all new & existing 25kV & 2X25kV TSSs for the time." Thus, it is proposed to provide only conventional fixed type Capacitor Bank & Reactors in the 2X25kV TSSs.

9.2 There are routes where modern locomotives and train sets having unity power factor are in operation and therefore the extent of compensation of Reactive Power as proposed in the initial guideline and in the initial issued layouts may not be required at certain locations. Further, there may be locations where the compensation at TSS is not being done at all. Therefore, the connection of shunt Capacitor bank in the layouts may be treated as indicative only. Hence, the capacity of the shunt capacitor has to be selected judiciously considering the existing load and Power Factor conditions.

9.3 In Scott Connected Scheme, initially the insulation class of equipment's on Main and Teaser Bus was considered as 72.5kV. After the introduction of interlocking (para 6.7 above) the insulation class of 52kV has been considered. Accordingly, the 52kV Insulation class conventional fixed type Capacitor Bank & Reactors which are provided in 25kV Traction system, are to be provided (if required) in both of the schemes as detailed below:

(a) If there is no requirement of compensation equipment, it is not required to be provided.

(b) If reactive power compensation of 2400kVAR at 25kV is required on both sides of the Traction Sub Station, then capacitor bank along with series reactor and associated equipment will be connected by using Single Pole Circuit Breaker and Isolators in the following manner

- In TSS of V Connected scheme, the capacitor bank along with associated equipment is to be connected on each side of the TSS on Traction Bus.
- In TSS of Scott Connected scheme, one capacitor bank along with associated equipment is to be connected on Traction Bus of Main winding and another is to be connected on Traction Bus of Teaser winding.

(c) If reactive power compensation of 4800kVAR at 25kV is required on both sides of the Traction Sub Station, then in addition to (b) above, another capacitor bank along with series reactor and associated equipment of 2400kVAR at 25kV is to be provided on the Feeder Bus also by using DPCB and isolators as indicated in Layouts.

Remark: For connection arrangements, layouts of the Traction Sub Station to be referred.

10.0 Protection

Technical Specification No. TI/SPC/PSI/PROTCT/7101 or latest for Control and Relay Panel Including Numerical type protection relays for Scott-connected Traction Power Transformers/V-Connected Traction Power Transformers, OHE protection, 55KV AT Protection and Shunt Capacitor Bank Protection for 2X25 kV Traction Sub-Station, Sectioning and Paralleling Post, Sub-Sectioning and Paralleling Post shall be referred.

10.1 Scott Connected TSS (02 Line/03Line/04Line): The details of the required relays for protection in scheme of 2x 60/84/100 MVA for supplying C&R panel for Scott connected transformers of 2x25 kV AT System are as below:

SN	Item	2 Line	3 Line	4 Line
1.	Control & Relay Panel, Incorporating Numerical Type Protective Relays given as under for TSS and Capacitor Bank	As per design of supplier		
2.	Numerical 3OC+EF protection Relay	02	02	02
3.	Numerical Differential Protection Relay	As required for 2 TRFR		
4.	Numerical 2OC+EF Relay	04	04	04
5.	Numerical Feeder Protection Relay	04	04	04
6.	Numerical Delta I Relay + Under Voltage Protection Relay to prevent closing of feeder CB under extended feed condition	04	04	04
7.	Numerical DC& AC Monitoring Relay	As per design of supplier		
8.	Inter-tripping Relay	02	02	02
9.	Master tripping Relay	08	08	08
10.	Voltage operated Auxiliary Tripping Relays	As per design of supplier		
11.	Numerical OC+ Current Unbalance Relay	02	02	02
12.	Numerical Under Voltage & Voltage Unbalance Protection Relay	02	02	02
13.	Master tripping Relay	02	02	02
14.	Numerical AT Differential Protection Relay	04	04	04
15.	Master tripping Relay	04	04	04
16.	Voltage operated Auxiliary Tripping Relays for 4 no. AT	As per design of supplier		

10.2 V-Connected TSS (02 Line/03Line/04Line): The details of the required relays for protection in scheme of 3x 38/53/63 MVA V Connected Transformers 2x25 kV AT System are as below:

SN	Items	2 Line	3 Line	4 Line
1.	Control & Relay Panel, Incorporating Numerical Type Protective Relays given as under for TSS and capacitor Bank	As per design of supplier		
2.	Numerical 3OC+EF protection Relay	03	03	03
3.	Numerical Differential Protection Relay	03	03	03
4.	Numerical 2OC+EF Relay	03	03	03
5.	Numerical Phase Failure Protection Relay	03	03	03
6.	Numerical Feeder Protection Relay	04	04	04
7.	Numerical Delta I Relay+ Under Voltage Protection Relay to prevent closing of feeder CB under extended feed condition	04	04	04
8.	Numerical DC& AC Monitoring Relay	As per design of supplier		
9.	Inter tripping Relay	03	03	03
10.	Master tripping Relay	07	07	07
11.	Voltage operated Auxiliary Tripping Relays	As per design of supplier		
12.	Numerical OC+ Current Unbalance Relay	02	02	02
13.	Numerical Under Voltage & Voltage Unbalance Protection Relay	02	02	02
14.	Master tripping Relay	02	02	02

10.3 The details of the required relays for protection at SP and SSP in scheme of Scott Connected for 02 line:

SN	**Item**	**SP**	**SSP**
1.	Control & Relay Panel, Incorporating Numerical Type Protective Relays for SP & SSP	As per design of supplier	
2.	Numerical AT Differential Protection Relay	04	02
3.	Master tripping Relay	04	02
4.	Voltage operated Auxiliary relay	As per design of supplier	

10.4 The details of the required relays for protection at SP and SSP in scheme of V Connected for 02 line:

SN	Item	SP	SSP
1.	Control & Relay Panel, Incorporating Numerical Type Protective Relays for SP & SSP	As per design of supplier	
2.	Numerical AT Differential Protection Relay	03	02
3.	Master tripping Relay	03	02
4.	Voltage operated Auxiliary relay	As per design of supplier	

10.5 In 3 Line and 4 Line section, same SP and SSP are proposed in both schemes, therefore, the required relays for protection at SP and SSP as detailed under are same in both scheme.

SN	Item	03 Line		04 Line	
		SP	SSP	SP	SSP
1.	Control & Relay Panel, Incorporating Numerical Type Protective Relays for SP & SSP	As per design of supplier			
2.	Numerical AT Differential Protection Relay	03	02	03	02
3.	Master tripping Relay	03	02	03	02
4.	Voltage operated Auxiliary relay	As per design of supplier			

10.6 Boundary (i.e. Interface post of 1X25kV & 2X25kV System) SP for 2 Line/3Line/4Line (for both Scott & V connected scheme)

SN	Item	**Panel**
1.	Control & Relay Panel, Incorporating Numerical Type Protective Relays for SP	01
2.	Numerical AT Differential Protection Relay	02
3.	Master tripping Relay	02
4.	Voltage operated Auxiliary relay	As per design of supplier

(i) Instrument transformer shall be provided as per the relevent specification applicable for the relays.

(ii) The above relays modules are indicative only, some of the above protection function may be clubbed or may be additionally required as per layout.

10.7 Protection for AT to be provided at TSS, SP & SSP

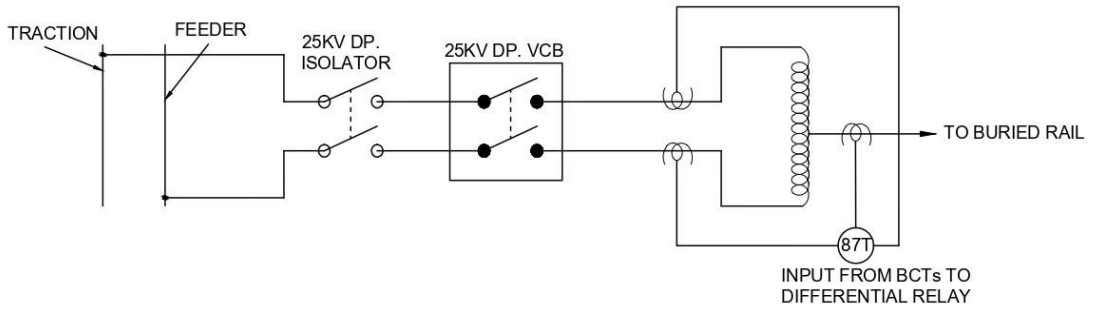

Figure: 2

Protection for Auto Transformer: Auto transformers are to be installed with bushing current transformers, 2X25kV DPCB & isolator as shown in figure 2 above, in order to protect and isolate autotransformer.

(a) Differential Relay (87T): Auto Transformer is protected for its inter-turn short circuits and internal earth faults by means of current differential relay by sensing current from both Line's CTs and comparing it with its neutral CT current.

(b) Other Protective Devices: The Auto transformers as supplied by the purchaser shall be fitted with the following additional protective devices, for which 4 Nos. Voltage operated Aux. Tripping Relays shall also to be provided.

i. Buchholz relay with alarm and trip contacts.
ii. Oil temperature indicator with alarm and trip contacts.
iii. Winding temperature indicator with alarm and trip contacts.
iv. Pressure relief device trip contact.
v. Low oil level alarm contacts.

11.0 SCADA System:

(a) Technical Specification No. TI/SPC/RCC/SCADA/0133 or latest for Supervisory Control and Data Acquisition (SCADA) system may be referred.

(b) As per revised SCADA specification no. TI/SPC/RCC/SCADA/0133, the single set of SCADA server can cater 100 numbers of RTUs. The RTU shall communicate with numerical relays on IEC 61850 protocols. New SCADA system as per RDSO specification no. TI/SPC/RCC/SCADA/0133 shall be provided for 2x25KV traction system. Further, the section where some TSS/SSP/SP are at 2x25 traction and some are on 25KV traction, the existing RTUs of 25KV traction, if feasible, may be interfaced with SCADA server provided for 2x25KV system, to the extent possible.

12.0 Earthing at TSS/SP/SSP:

(a) Earthing as per the RDSO Specification no. TI/SPC/PSI/ERTHNG/0210 is to be provided. The neutral of the Autotransformers at TSS/SP/SSP should also be connected to Buried Rail as mentioned in the specification.

(b) The fault level on the 2X25kV system is to be taken as 12kA for 3 seconds on the lines of DFCCIL as the MVA ratings of the transformers are higher than conventional. Accordingly, Earthing grid at the switching post (SP/SSP) should be prepared by taking fault current of 12kA with 3 second duration in the calculations given in the specification no. TI/SPC/PSI/ERTHNG/0210. The

switching post (SP/SSP) shall have the provision of buried rail for connection of traction return current. The Neutral of the Autotransformer should be connected to Buried rail.

13.0 The main equipment used in various schemes along with their Specification is detailed as under- (Latest specification should be referred)

13.1 Traction Sub Station with Scott Connected Transformer

SN	Equipment Description	Specification no.	Quantity in No.		
			DL	TL	FL
1.	220kV or 132kV , 1250A Triple Pole Isolator (with earth blade)	TI/SPC/PSI/ISOLTR/0210(06/21)	02	02	02
2.	220kV or 132kV , 1250A Triple Pole Isolator (For Bus Coupling)	TI/SPC/PSI/ISOLTR/0210(06/21)	01	01	01
3.	220kV or 132kV Potential Transformer (accuracy class 0.2) for ABT metering (Indication and Metering)	To be procured as per the specification/sources of DISCOMs/Power utilities	06	06	06
4.	220kV or 132kV Current Transformer (accuracy class 0.2s) for ABT metering (Metering)	To be procured as per the specification/sources of DISCOMs/Power utilities	06	06	06
5.	220kV or 132kV , 1250A Triple Pole Isolator (without earth blade)	TI/SPC/PSI/ISOLTR/0210(06/21)	02	02	02
6.	220kV or 132kV Support Insulator	TI/SPC/OHE/POST/0100 (01/10) with A&C slip no.01.	As reqd	As reqd	As reqd
7.	220kV (400-200/5A) or 132kV (800-400/5) Current transformer (For Transformer Protection)	TI/SPC/PSI/CT/0210(06/21)	06	06	06
8.	220kV or 132kV SF6 Circuit Breaker (Triple Pole)	TI/SPC/PSI/HVCB/0121 (05/21) with A&C slip no. 01	02	02	02
9.	198kV or 120kV Lightening arrester (HV Side)	ETI/PSI/137(08/89) with A&C slip no. 01 to 07	06 or 12	06 or 12	06 or 12
10.	60/84/100MVA, 220/2X25kV or 132/2X25kV Single Phase Traction Power Transformer with Bushing CTs	TI/SPC/PSI/TRNPWR/5200 (02/21) with A&C slip no. 01	02	02	02
11.	60kV Lightening arrester	ETI/PSI/137(08/89) with A&C slip no. 01 to 07.	08	08	08
12.	50kV Current Transformer (1500-750/5)	TI/SPC/PSI/CT/0210(06/21)	08	08	08
13.	50kV Double pole SF6 Breaker (2000A)	TI/SPC/PSI/HVCB/0121(05/21)	04	04	04
14.	50kV Double Pole Manual Isolator	TI/SPC/PSI/ISOLTR/0210(06/21)	04	04	04
15.	50kV Support Insulator or 66kV Support Insulator	TI/SPC/OHE/POST/0100 with A&C slip no. 01	As reqd	As reqd	As reqd
16.	27.5kV/110V Potential Transformer (Type-II) (52kV Insulation Class)	TI/SPC/PSI/PT/0210(06/21)	08	08	08
17.	25kV Double Pole Manual Isolator (2000A)	TI/SPC/PSI/ISOLTR/0210(06/21)	12	24	28
18.	27.5kV/110V Potential Transformer (Type-I) (52kV Insulation Class)	TI/SPC/PSI/ PT/0210(06/21)	----	12	16
19.	12.3MVA Autotransformer (55/27.5kV) with Bushing CTs	TI/SPC/PSI/AUTOTR/1200 (02/21)	04	04	04
20.	25kV Double Pole Vacuum Interrupter	TI/SPC/PSI/LVCBIN/0120(12/13)	02	06	08

		with A&C slip no. 01			
21.	50kVA, 25kV/240Volt LT supply transformer	ETI/PSI/15 (08/03)	02	02	02
22.	25kV Drop Out Fuse	ETI/PSI/14(01/86) with A&C slip no. 01	02	02	02
23.	42kV Lightening Arrester	TI/SPC/PSI/MOGTLA/0101 (02/15)	12	16	16
24.	Shunt capacitor 2400kVAR at 25kV	TI/SPC/PSI/FC&SR/0100 (01/10)	04	04	04
25.	Series Reactor for Low loss	TI/SPC/PSI/FC&SR/0100 (01/10)	04	04	04
26.	25kV Single Pole Manual Isolator	TI/SPC/PSI/ISOLTR/0210 (06/21)	04	04	04
27.	25kV Double Pole Vacuum Circuit Breaker (2000A)	TI/SPC/PSI/LVCBIN/0120(12/13) with A&C slip no. 01	10	10	10
28.	25kV Current Transformer (1500-750/5A)	TI/SPC/PSI/CT/0210(06/21)	08	08	08
29.	25kV Current Transformer (200-100/5A) (For compensation equipment)	TI/SPC/PSI/CT/0210(02/21)	04	04	04
30.	Low Tension Distribution Panel	TI/SPC/PSI/LTDPNL/0210 (10/21)	02	02	02
31.	25kV Support Insulator	TI/SPC/OHE/INS/0070 (04/07) with A&C slip no. 01 & 02	As reqd	As reqd	As reqd
32.	25 kV Double Pole Motorised isolator (2000A)	TI/SPC/PSI/ISOLTR/0210(06/21)	01	01	01

13.2 Traction Sub Station with Transformers in V Connection

SN	Equipment Description	Specification no.	Quantity in no.		
			DL	TL	FL
1.	220kV or 132kV , 1250A Triple Pole Isolator (with earth blade)	TI/SPC/PSI/ISOLTR/0210(06/21)	02	02	02
2.	220kV or 132kV , 1250A Triple Pole Isolator (For Bus Coupling)	TI/SPC/PSI/ISOLTR/0210(06/21)	02	02	02
3.	220kV or 132kV Potential Transformer (accuracy class 0.2) for ABT metering (Indication and Metering)	To be procured as per the specification/sources of DISCOMs/Power utilities	06	06	06
4.	220kV or 132kV Current Transformer (accuracy class 0.2s) for ABT metering (Metering)	To be procured as per the specification/sources of DISCOMs/Power utilities	06	06	06
5.	220kV or 132kV , 1250A Double Pole Isolator (without earth blade)	TI/SPC/PSI/ISOLTR/0210(06/21)	03	03	03
6.	220kV or 132kV Support Insulator	TI/SPC/OHE/POST/0100 (01/10) with A&C slip no.01.	As reqd	As reqd	As reqd
7.	220kV (400-200/5A) or 132kV (800-400/5) Current transformer (For Transformer Protection)	TI/SPC/PSI/CT/0210(06/21)	06	06	06
8.	220kV or 132kV SF6 Circuit Breaker (Double Pole)	TI/SPC/PSI/HVCB/0121(05/21)	03	03	03
9.	198kV or 120kV Lightening arrester (HV Side)	ETI/PSI/137(08/89) with A&C slip no. 01 to 07	06 or 12	06 or 12	06 or 12
10.	38/53/63MVA, 220/2X25kV or 132/2X25kV Single Phase Traction Power Transformer	TI/SPC/PSI/TRNPWR/4200 (02/21)	03	03	03
11.	42kV Lightening arrester	TI/SPC/PSI/MOGTLA/0101 (02/15)	18	22	26

12.	25kV Current Transformer (1500-750/5A) (Including 03 as NCT)	TI/SPC/PSI/CT/0210(02/21)	17	17	17
13.	25kV Current Transformer (200-100/5A) (For compensation equipment)	TI/SPC/PSI/CT/0210(02/21)	04	04	04
14.	25kV Double pole Vacuum Circuit Breaker (2000A)	TI/SPC/PSI/LVCBIN/0120(12/13) with A&C slip no. 01	09	09	09
15.	25kV Double Pole manual Isolator (2000A)	TI/SPC/PSI/ISOLTR/0210	17	25	29
16.	25kV Support Insulator	TI/SPC/OHE/INS/0070 (04/07) with A&C slip no. 01 & 02	As reqd	As reqd	As reqd
17.	50kVA, 25kV/240Volt LT supply transformer	ETI/PSI/15 (08/03)	02	02	02
18.	25kV Drop Out Fuse	ETI/PSI/14(01/86) with A&C slip no. 01	02	02	02
19.	27.5kV/110V Potential Transformer (Type-II) (52kV Insulation Class)	TI/SPC/PSI/PT/0210(06/21)	12	08	08
20.	27.5kV/110V Potential Transformer (Type-I)	TI/SPC/PSI/PT/0210(06/21)	----	12	16
21.	25kV Double Pole Vacuum Interrupter (2000A)	TI/SPC/PSI/LVCBIN/0120(12/13) with A&C slip no. 01	02	06	08
22.	Shunt capacitor (2400kVAR at 25kV)	TI/SPC/PSI/FC&SR/0100 (01/10)	04	04	04
23.	Series Reactor for Low loss	TI/SPC/PSI/FC&SR/0100 (01/10)	04	04	04
24.	25kV Double Pole Motorized Isolators (2000A)	TI/SPC/PSI/ ISOLTR/0210	02	02	02
25.	Low Tension Distribution Panel	TI/SPC/PSI/LTDPNL/0210(10/21)	02	02	02

13.3 Sectioning and Paralleling post (SP) for two line

SN	Equipment Description	Specification no.	Quantity in No.	
			Scott Scheme	V Scheme
1.	8MVA Auto Transformer (55/27.5kV) with Bushing CTs	TI/SPC/PSI/AUTOTR/1200 (02/21)	04	--------
	16.5MVA Auto Transformer (55/27.5kV) with Bushing CTs	TI/SPC/PSI/AUTOTR/1200 (02/21)	---------	03
2.	25 kV Double Pole Vacuum Circuit Breaker (2000A)	TI/SPC/PSI/LVCBIN/0120(12/13) with A&C slip no. 01	04	05
3.	50kV Double Pole SF6 Circuit Breaker (2000A)	TI/SPC/PSI/HVCB/0121 (05/21)with A&C slip no. 01	02	02
4.	25 kV Double Pole Vacuum Interrupter (2000A)	TI/SPC/PSI/LVCBIN/0120(12/13) with A&C slip no. 01	02	04
5.	25 kV Double Pole Isolator (Manual) (2000A)	TI/SPC/PSI/ISOLTR/0210 (02/21)	12	13
6.	25 kV Double Pole Isolator (Motorised) (2000A)	TI/SPC/PSI/ISOLTR/0210 (02/21)	-----	02
7.	25kV Potential Transformer (Type-1)	TI/SPC/PSI/PT/0210 (06/21)	04	04
8.	25kV/240V LT Supply Transformer (10kVA)	ETI/PSI/15 (08/03)	02	02
9.	25kV Dropout Fuse Switch	ETI/PSI/14(01/86) with A&C slip no. 01	02	02
10.	42kV Lightning Arrester	TI/SPC/PSI/MOGTLA/0101 (02/15)	08	08
11.	Low Tension Distribution Panel	TI/SPC/PSI/LTDPNL/0210 (10/21)	02	02
12.	25kV Support Insulator	TI/SPC/OHE/INS/0070 (04/07) with A&C slip no. 01 & 02	As reqd	As reqd

13.4 Sub Sectioning and Paralleling Post (SSP) for Two line

SN	Equipment Description	Specification no.	Quantity in No.	
			Scott Scheme	V Scheme
1.	8MVA Auto Transformer (55/27.5kV) with Bushing CTs	TI/SPC/PSI/AUTOTR/1200 (02/21)	02	--------
	16.5MVA Auto Transformer (55/27.5kV) with Bushing CTs	TI/SPC/PSI/AUTOTR/1200 (02/21)	---------	02
2.	25 kV Double Pole Vacuum Circuit Breaker (2000A)	TI/SPC/PSI/LVCBIN/0120(12/13) with A&C slip no. 01	02	02
3.	25 kV Double Pole Vacuum Interrupter (2000A)	TI/SPC/PSI/LVCBIN/0120(12/13) with A&C slip no. 01	05	04
4.	25 kV Double Pole Isolator (Manual) (2000A)	TI/SPC/PSI/ISOLTR/0210 (06/21)	12	10
5.	25 kV Double Pole Isolator (Motorised) (2000A)	TI/SPC/PSI/ISOLTR/0210 (06/21)	-----	02
6.	25kV Potential Transformer (Type-I)	TI/SPC/PSI/PT/0210 (06/21)	04	04
7.	25kV/240V LT Supply Transformer(10kVA)	ETI/PSI/15 (08/03)	02	02
8.	25kV Dropout Fuse Switch	ETI/PSI/14(01/86) with A&C slip no. 01	02	02
9.	42kV Lightning Arrester	TI/SPC/PSI/MOGTLA/0101 (02/15)	08	08
10.	Low Tension Distribution Panel	TI/SPC/PSI/LTDPNL/0210 (10/21)	02	02
11.	25kV Support Insulator	TI/SPC/OHE/INS/0070 (04/07) with A&C slip no. 01 & 02	As reqd	As reqd

13.5 Sectioning and Paralleling Post (SP) For three line and Four Line (for both Scott Connected and V connected Scheme)

SN	Equipment Description	Specification no.	Quantity in No.	
			TL	FL
1.	16.5MVA Auto Transformer (55/27.5kV) with Bushing CTs	TI/SPC/PSI/AUTOTR/1200 (02/21)	03	03
2.	25 kV Double Pole Vacuum Circuit Breaker (2000A)	TI/SPC/PSI/LVCBIN/0120 (12/13) with A&C slip no. 01	03	03
3.	50kV Double Pole SF6 Circuit Breaker (2000A)	TI/SPC/PSI/HVCB/0121 with A&C slip no. 01	02	02
4.	25 kV Double Pole Vacuum Interrupter (2000A)	TI/SPC/PSI/LVCBIN/0120(12/13) with A&C slip no. 01	06	08
5.	25 kV Double Pole Isolator (Manual) (2000A)	TI/SPC/PSI/ISOLTR/0210 (06/21)	17	21
6.	25 kV Double Pole Isolator (Motorised) (2000A)	TI/SPC/PSI/ISOLTR/0210 (06/21)	03	04
7.	25kV Potential Transformer (Type-1)	TI/SPC/PSI/PT/0210 (06/21)	06	08
8.	25kV/240V LT Supply Transformer(10kVA)	ETI/PSI/15 (08/03)	02	02
9.	25kV Dropout Fuse Switch (1A)	ETI/PSI/14(01/86) with A&C slip no. 01	02	02

10.	42kV Lightning Arrester	TI/SPC/PSI/MOGTLA/0101 (02/15)	12	16
11.	Low Tension Distribution Panel	TI/SPC/PSI/LTDPNL/0210 (10/21)	02	02
12.	25kV Support Insulator	TI/SPC/OHE/INS/0070 (04/07) with A&C slip no. 01 & 02	As reqd	As reqd

13.6 Sub Sectioning and Paralleling Post (SSP) For three line and Four Line (for both Scott Connected and V connected Scheme)

SN	Equipment Description	Specification no.	Quantity in No.	
			TL	FL
1.	16.5MVA Auto Transformer (55/27.5kV) with Bushing CTs	TI/SPC/PSI/AUTOTR/1200 (02/21)	02	02
2.	25 kV Double Pole Vacuum Circuit Breaker (2000A)	TI/SPC/PSI/LVCBIN/0120(12/13) with A&C slip no. 01	02	02
3.	25 kV Double Pole Vacuum Interrupter (2000A)	TI/SPC/PSI/LVCBIN/0120(12/13) with A&C slip no. 01	06	08
4.	25 kV Double Pole Isolator (Manual) (2000A)	TI/SPC/PSI/ISOLTR/0210 (06/21)	14	18
5.	25 kV Double Pole Isolator (Motorised) (2000A)	TI/SPC/PSI/ISOLTR/0210 (06/21)	03	04
6.	25kV Potential Transformer (Type-1)	TI/SPC/PSI/PT/0210 (06/21)	06	08
7.	25kV/240V LT Supply Transformer(10kVA)	ETI/PSI/15 (08/03)	02	02
8.	25kV Dropout Fuse Switch (1A)	ETI/PSI/14(01/86) with A&C slip no. 01	02	02
9.	42kV Lightning Arrester	TI/SPC/PSI/MOGTLA/0101 (02/15)	12	16
10.	Low Tension Distribution Panel	TI/SPC/PSI/LTDPNL/0210 (10/21)	02	02
11.	25kV Support Insulator	TI/SPC/OHE/INS/0070 (04/07) with A&C slip no. 01 & 02	As reqd	As reqd

13.7 Boundary Sectioning and Paralleling Post (SP) for Two line, three Line and Four Line

SN	Equipment Description	Specification no.	DL		TL	FL
			Scott Scheme	V Connected Scheme		
1.	12.3MVA Auto Transformer (55/27.5kV) with Bushing CTs	TI/SPC/PSI/AUTOTR/1200 (02/21)	02	----	-----	----
	16.5MVA Auto Transformer (55/27.5kV) with Bushing CTs	TI/SPC/PSI/AUTOTR/1200 (02/21)	-----	02	02	02
2.	50kV Double Pole SF6 Circuit Breaker (2000A)	TI/SPC/PSI/HVCB/0121 (05/21)with A&C slip no. 01	02	02	02	02
3.	25 kV Double Pole Vacuum Circuit Breaker (2000A)	TI/SPC/PSI/LVCBIN/0120(12/13) with A&C slip no. 01	02	02	02	02
4.	25 kV Double Pole Vacuum Interrupter (2000A)	TI/SPC/PSI/LVCBIN/0120(12/13) with A&C slip no. 01	01	02	03	04
5.	25 kV Single Pole Vacuum	TI/SPC/PSI/LVCBIN/0120(12	01	02	03	04

	Interrupter (2000A)	/13) with A&C slip no. 01				
6.	25 kV Double Pole Isolator (Manual) (2000A)	TI/SPC/PSI/ISOLTR/0210 (06/21)	08	07	09	12
7.	25 kV Double Pole Isolator (Motorised) (2000A)	TI/SPC/PSI/ISOLTR/0210 (06/21)	-----	----	03	04
8.	25 kV Single Pole Isolator (Manual) (2000A)	TI/SPC/PSI/ISOLTR/0210 (06/21)	02	05	07	08
9.	25 kV Single Pole Isolator (Motorised) (2000A)	TI/SPC/PSI/ISOLTR/0210 (06/21)	—	02	----	----
10.	25kV Potential Transformer (Type-1)	TI/SPC/PSI/PT/0210 (06/21)	04	04	06	08
11.	25kV/240V LT Supply Transformer(10kVA)	ETI/PSI/15 (08/03)	02	02	02	02
12.	25kV Dropout Fuse Switch (1A)	ETI/PSI/14(01/86) with A&C slip no. 01	02	02	02	02
13.	42kV Lightning Arrester	TI/SPC/PSI/MOGTLA/0101 (02/15)	06	06	09	12
14.	Low Tension Distribution Panel	TI/SPC/PSI/LTDPNL/0210 (10/21)	02	02	02	02
15.	25kV Support Insulator	TI/SPC/OHE/INS/0070(04/07) with A&C slip no. 01 & 02	As reqd	As reqd	As reqd	As reqd

14.0 <u>Bus Bar and Conductor to be used in various TSS/SP/SSP are as below:</u>

a) 19/2.5mm Galvanized Steel Stranded Earth Wire to be used as an earth wire. (RDSO Drawing no. ETI/PSI/0225 (Mod B)).

b) Primary Side of the TSS: For 220kV & 132kV, 28.62mmm ACSR "Zebra" conductor to be used. (IS: 398 Part-II).

c) Secondary Side of the TSS:
- For Scott Connected TSS - 50mm DIA Aluminum Bus Bar as per IS-5082 (Aluminium Alloy to Grade in WP condition) & 36mm Dia AAAC 'Bersismis' Conductor (IS: 398 Part-4, 767mm^2, 61/4.00 conductors) is to be used. For the specific location of use of Bus bar or Conductor please refer the drawings.
- For V Connected TSS: 50mm DIA Aluminium Bus Bar (IS-5082 (Aluminium Alloy to Grade in WP condition) & 38.25 mm Dia AAC 'Bull' Conductor (IS: 398 Part-1, 865.4mm^2, 61/4.25 conductors) is to be used. For the specific location of use of Bus bar or Conductor please refer the drawings.

d) At the SP/SSP Also, 50mm DIA Aluminium Bus Bar (IS-5082 (Aluminium Alloy to Grade in WP condition) & 38.25 mm Dia AAC 'Bull' Conductor (IS: 398 Part-1, 865.4mm^2, 61/4.25 conductors) is to be used. For the specific location of use of Bus bar or Conductor please refer the drawings.

e) Accordingly, the connectors of the suitable matching size of the conductor/Bus bar (para 14 above) should be purchased from the CORE approved sources of the connectors. In case, CORE approved sources are not available, the connector shall be procured as per IS: 5561.

f) Required Cables to be procured as per relevant Indian Standard.

15.0 Battery Capacity and battery charger to be used

The stand by battery charger at TSS/SP/SSP should be provided.

SN	Location	Capacity	Specification For	
			Battery	Battery Charger
1.	TSS	Lead Acid Batteries 110V, 250AH	RDSO/PE/SPEC/TL /0040 (Rev. '2')-2021	TI/SPC/PSI/200-250/ CHGR/0210 (07/21)
2.	SP/SSP	Lead Acid Batteries 110V, 150AH	RDSO/PE/SPEC/TL /0040 (Rev. '2')-2021-	TI/SPC/PSI/40-150/ CHGR/1210 (07/21)

16.0 Interface of 25kV system with 2X25kV system and extension of feed from 25kV system to 2X25kV System and vice versa:

16.1 The SP may be proposed as an interface between subject two systems as the SP have been provided with adequate AT capacity to cater the feed extension. However, the overloading of the Autotransformer/Autotransformers installed at SP shall determine the extent of feed extension.

16.2 Extension of feed between 2 x25 kV system and 1x 25 kV system

General Principle

Generally speaking, extension of feed from 1x 25 kV section to 2x 25 k V section and vice versa is possible with following remarks concerning capacity of AT at the boundary of both systems.

a) Extension of feed from 1x 25 k V section to 2x 25 kV section.

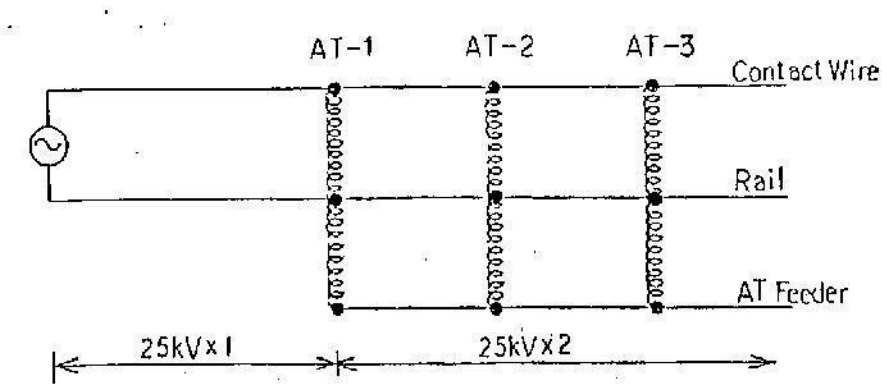

Figure:3

In this case, AT-1 at boundary of both systems is burdened with all the train loads which are located at right side of AT -2 and nearly half of the train loads between AT-1 and AT-2 Therefore, overload of AT-1 shall be observed.

b) Extension of feed from 2 x25 kV section to 1x 25 kV section.

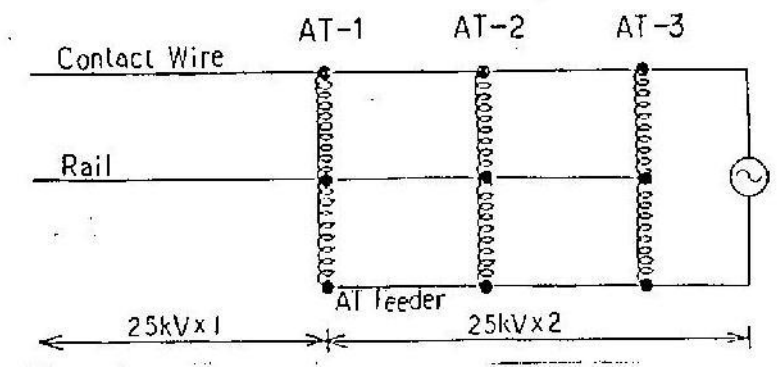

Figure:4

In this case, AT-1 at boundary of both systems is burdened with all the train loads on 1X25 kV section and nearly half of the train loads between AT-1 and AT-2 which shall be remarked on the extension.

End

Annexure-1

Government of India,
Ministry of Railways
Research Designs & Standards Organisation,
Manak Nagar, Lucknow– 226 011

Telephone : 2465763 (O).
42805 (Off.)
Fax : 91-0522-2465763
E-mail:psi.dti@gmail.com

No.TI/PSI/TSS/Policy/17 Dated-13.10.2017

The Chief Electrical Engineer,
South Central Railway,
Railnilayam,
Secunderabad-500 371.

Sub: 132kV Current Transformers for ABT metering.

Ref: Your letter No.E.220/RDSO/PSI/SPEC/Vol.VI dated 03.05.2016.

Reference above, the Traction Sub-station Layout drawings No.TI/DRG/PSI /TSSLO/RDSO/00004/02/1 Rev. 'A' and No. TI/DRG/PSI/TSSLO/RDSO/00005/02/1 Rev. 'A' have been issued vide RDSO letter No. TI/PSI/DRG/TSS-SPC/POLICY/15 dated 15.07.2015 and circulated to zonal Railways with provision of Current Transformers (CTs) & Voltage Transformer (PTs) for ABT metering.

The Current Transformer of 0.2/0.2s accuracy class and potential Transformer of 0.2 accuracy may be used at TSS for ABT metering as stated in the above mention drawings. Since CT and PT required for ABT metering are general purpose commercially available equipment's which are also being used by various DICOMs/Power utilities. Therefore it was decided to use the same spec which is being used by various power utilities and there is no need of having separate RDSO specifications for the same.

13-10-2017

(A. K.Sharma)
(Director –PSI)
For Director General(TI)

O/C

Annexure-2

Government of India,
Ministry of Railways
Research Designs & StandardsOrganisation,
Manak Nagar,Lucknow– 226 011

Telephone: 2465763 (O).
42805(Off.)
Fax : 91-0522-2465763
E-mail:psi.dti@gmail.com

सत्यमेव जयते

No. TI/PSI/TSS/POLICY/18/02

Dated, the26rd July, 2018

To,

1. The Principal Chief Electrical Engineer,
   i. Central Railway, Station Building, Mumbai CST – 400 001.
   ii. Eastern Railway, Fairlie Place, Kolkata-700 001.
   iii. East Central Railway, Hajipur-844 101.
   iv. East Coast Railway, Bhubaneshwar-751 023.
   v. Northern Railway, Baroda House, New Delhi - 110 001.
   vi. North Central Railway, Allahabad-211 015.
   vii. North Eastern Railway, Gorakhpur-273 012.
   viii. North Frontier Railway, Mailgaon - 781 011.
   ix. North Western Railway, Jaipur – 302 017.
   x. Southern Railway, Park Town, Chennai- 600 003.
   xi. South Central Railway, Rail Nilayam, Secunderabad-500 371.
   xii. South Eastern Railway, Garden Reach, Kolkata-700 043.
   xiii. South East Central, Railway, Bilaspur-495 004.
   xiv. South West Railway, DRM's Office, Hubli-580 028.
   xv. Western Railway, Churchgate, Mumbai-400 020.
   xvi. West Central Railway, Jabalpur- 482 001.
   xvii. Belapur Bhavan, Sector-11, CBD Belapur, Navi Mumbai 400614
   xviii. Central organisation for Railway Electrification, Allahabad-211001
   xix. Metro Railway, 33/1, Jawahar LAL Nehru Road, Kolkata-700071
2. The Executive Director (Electrical), M/s Rail Vikas Nigam Limited, 1stFloor, August Kranti Bhavan, Bhikaji Cama Place, New Delhi-110066.
3. The General Maneger (Electrical), M/s IRCON, International Limited, C-4 District Center, Saket, New Delhi-110017.
4. Director (Technical), M/s DFCCIL, Pragati Maidan, Metro Station Building, New Delhi-110001.

Sub: General Layout of Traction Sub- Stations.

Ref: (i) Railway Board Letter no. 2006/Elect (G)/170/2 dated 12.07.2018.
(ii) Railway Board Letter no. 2008/Elect(G)/170/1Pt-III(NTPC/RGPPL)Vol-II dated 23.02.2018.

1. In view of the referred Railway Board letter (ii), the General Layout of the Traction Sub-Station for new siteshas been modified by this office for ABT metering. The soft copies of the Drawings has been uploaded on the railsaver website i.e. **www.railsaver.gov.in**& same may be referred. The modified drawing number with revision is tabulated below:

SN	Drawings no.	Description	Rev.	Date.
1.	TI/DRG/PSI/TSSLO/ RDSO/00001/01/0	Typical layout of 132/27 kV traction substation (Type-I).	A	25.07.18
2.	TI/DRG/PSI/TSSLO/ RDSO/00002/02/0	Typical layout of 132/27 kV traction substation (Type – II)	A	25.07.18
3.	TI/DRG/PSI/TSSLO/ RDSO/00003/02/0	Typical layout of 132/27 kV traction substation (Type-III).	A	25.07.18
4.	TI/DRG/PSI/TSSLO/ RDSO/00004/02/1	Typical layout of 132/27 kV traction substation (Type-IV) with outgoing feeders and meteringfacilities.	B	25.07.18
5.	TI/DRG/PSI/TSSLO/ RDSO/00005/02/1	Typical layout of 132/27 kV traction substation (Type-V).	B	25.07.18
6.	TI/DRG/PSI/TSSLO/ RDSO/00006/02/0	Typical layout of 132/27 kV traction substation (Type-VI).	A	25.07.18
7.	TI/DRG/PSI/TSSLO/	Typical layout of 132/27 kV traction	A	25.07.18

O/c

	RDSO/00007/02/0	substation (Type – VII).		
8.	TI/DRG/PSI/TSSLO/ RDSO/00008/02/0	Typical layout of 132/27 kV traction substation (Type-VIII).	A	25.07.18
9.	TI/DRG/PSI/TSSLO/ RDSO/00009/02/0	Typical layout of 132/27 kV traction substation with single transformer (Type IX).	A	25.07.18
10.	TI/DRG/PSI/TSSLO/ RDSO/00010/02/0	Typical layout of 132/25 kV traction substation with 132 kV switching station (Type – X).	A	25.07.18

2. To provide the CT & PT for ABT metering extra space is required in existing TSS. Since the availability of space in existing TSS is site specific, therefore no standard drawing can be issued for existing TSS. However based on space availability and site conditions following solutions are proposed for providing ABT metering system in Existing Traction Sub-Station:

   i) Case No.1: In the layout where already there is a provision of metering CT and metering PT.

   In such type of TSS existing metering CT & PT may be replaced with ABT metering compatible CT & PT and therefore, no change in layout is required.

   ii) Case No.2: Where sufficient space (6 meter or more) is available along the length of existing TSS.

   In such type of TSS ABT metering compatible CT & PT may be provided in the incoming side maintaining required 3 meter inter equipment distance on HT side.

   iii) Case no. 3: In the layout where only 3-6 meter space is available along the length of existing TSS.

   In such type of TSS ABT metering compatible CT may be provided along the length and lateral space available between two bays may be used for metering PT.

   iv) Case no. 4: In the layout where space is not available along the length.

   In such type of TSS dual core CT and dual core PTs may be used. The additional core of CT & PT will be used for ABT meter. It may be noted that use of dual core CT & PT can be made in TSS provided Railways have examined the acceptability from State Electricity Utilities.

3. Standard Clearances required to be maintained in providing CT & PT on the site for 132kV & 220 kV are as :

		132 kV	220 kV	Reference
1.	Between one phase and earth for rigid connection	1300 mm	2100 mm	As per Para No. 20914 of ACTM Volume II of Part-I
2.	Between any points where man may be required to stand to the nearest			
	(a) Unsecured conductor in air	4000 mm	5000 mm	As per Para No. 20914 of ACTM Volume II of Part-I
3.	Minimum height of Bus bar	4600 mm	5500 mm	As per Para No. 20914 of ACTM Volume II of Part-I
4.	Clearance between equipments	3000 mm	4000 mm	Based on the earlier issued drawings

These issues with approval of the competent authority.

26-07-2018

(A.K. Sharma)
(Director –PSI)
for Director General (TI)

Encl: NIL.

O/C

Copy to: The Secretary (Electrical),Railway Board, Rail Bhavan, New Delhi-110001.

Annexure-3

GOVERNMENT OF INDIA
MINISTRY OF RAILWAYS
RAILWAY BOARD

No. 2008/RE/170/1 **Dated 12.06.12**

Chief Electrical Engineers,
All Indian Railways (Electrified)

Sub: Provision of Dynamic Reactor Power Compensating (DPRC) equipment at 25 kV & 2x25 kV TSSs
Ref: Board Latter No. 2008/Elect(G)/150/10 dt 03.10.08, 04.12.08 & 09.03.11

Board's policy guidelines for provision of Dynamic Reactor Power Compensating (DRPC) equipment for new & existing 25 kV TSS vide above reference has been reviewed based on the performance & progress of implementation, heavy investment involved and recurring auxiliary losses, difficulty in determining the correct rating of DRPC at new TSS due to non-availability of load curves, change in policy by DISCOMs for incentive on power factor improvement beyond a specific value etc.

Accordingly in supersession of all previous policy guidelines on the subject, it has been decided that Railways/CORE /MRVC/RVNL etc. should provided only fixed type capacitor bank in all new & existing 25 kV & 2x25 kV TSSs for the time being.

This issued with the approval of Board (ML).

Sushil Kumar
Director Elect. Engg.(PS)
Railway Board

Copy to : Sr.ED/TI/RDSO: for information. This disposes off RDSO's reference dt. 10.05.10 for provision of DRPC at 2x25 kV TSS.

031746